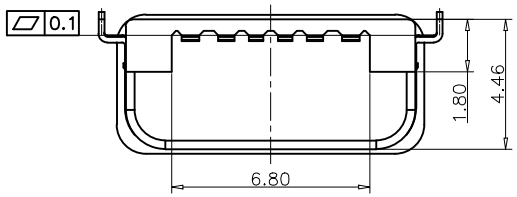

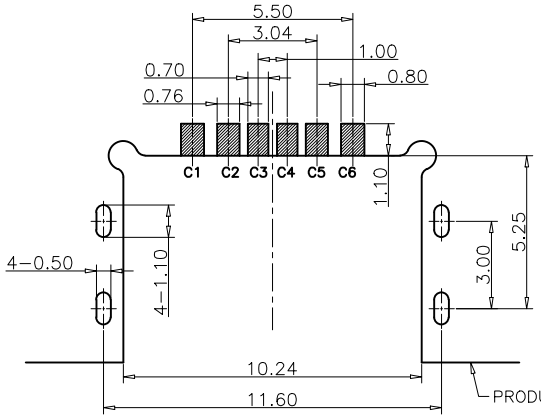

RECOMMEND P.C.B LAYOUT(COMPONENT SIDE)

TOLERANCE FOR PCB LAYOUT IS ±0.05

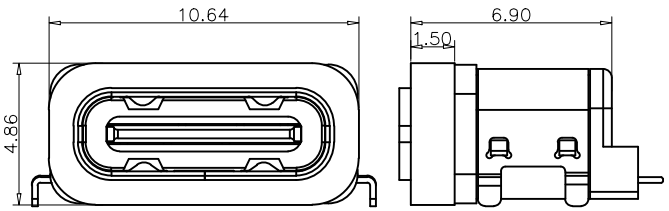

加防水圈示意图

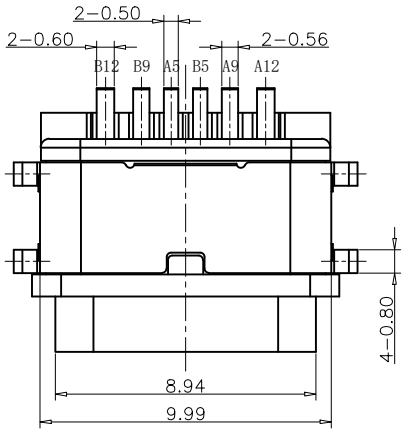

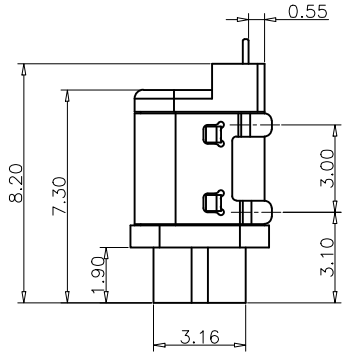

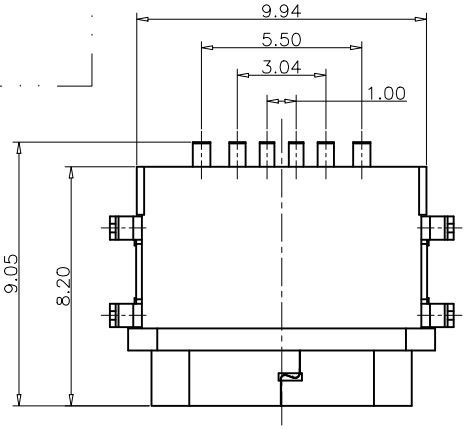

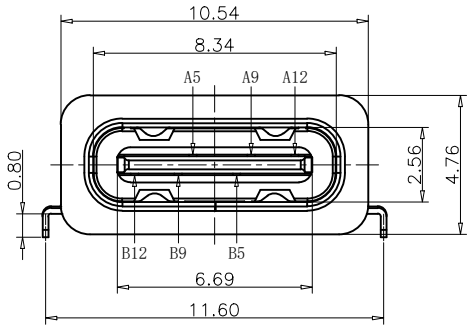

NOTES:

SPECIFICATION:

1.CURRENT RATING: 3.0A MAX
2.VOLTAGE: 100 VAC
3.TEMPERATURE RANGE: -30°C~+85°C
4.CONTACT RESISTANCE: 40 MILLIONHM MAX
5.INSULATION RESISTANCE: 100 MEGOHMS MIN
6.LNSERTION FORCE: 5N~20N
7.UNMATING FORCE: 8N-20N
8.DURABILITY: 10000 CYCLES
9.WATER PROOFNESS:THISPRODUCTIS BASED ON IPX7.

TABLE:

NO	PART	Q'TY	Material
1	SHELL	1	STAINLESS STEEL,NI PLATED
2	CONTACT	6	COPPER STEEL,TIN/Au/NI PLATED
3	MID PLATE	1	STAINLESS STEEL,NO PLATING
4	1MD HOUSING	1	HIGH TEMPERATURE RESISTANT PLASTIC BLACK UL94 V-0
5	2MD HOUSING	1	HIGH TEMPERATURE RESISTANT PLASTIC BLACK UL94 V-0
6	SHIELDING PLATE	1	STAINLESS STEEL,NI PLATED

PIN ASSIGNMENT:

PIN NO	A1&B12	A4&B9	A5	A5	A9&B4	A12&B1
SIGNAL NAME	GND	VBUS	CC1	CC2	VBUS	GND
PCB PAD NO.	C1	C2	C3	C4	C5	C6

TOLERANCE:		UNIT				
X. ± 0.50	X.° ± 1°	MM	深圳市同心富精密电子有限公司 Shenzhen TXF Precision Electronics			
.X ± 0.30	.X° ± 1°	SHEET				
.XX ± 0.20	.XX° ± 1.0°	1/1	DRAW:	Andy	2019.11.13	P/N:
.XXX ± 0.10		SCALE	DESIGN:			ITEM: TYPE C 6P 沉板防水母座(外壳4脚插板，端子SMT)
		1:1	CHECK:			
		REV: A	APPR:			DRW NO: 087